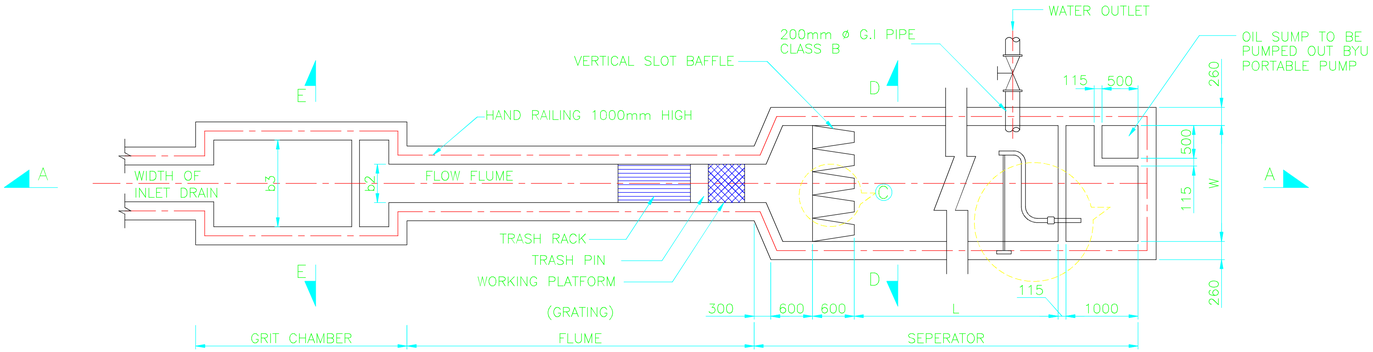

PLAN

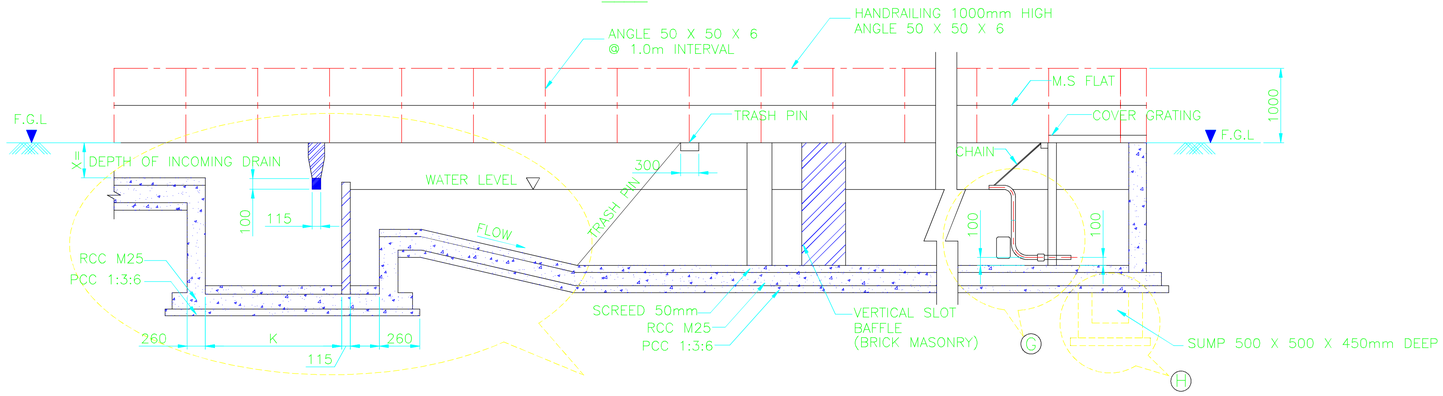

SECTION A–A

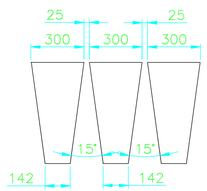

DETAIL – Ⓒ

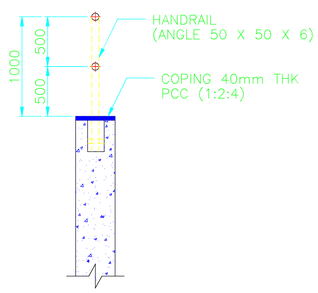

TYPICAL DETAILS OF HAND RAILS

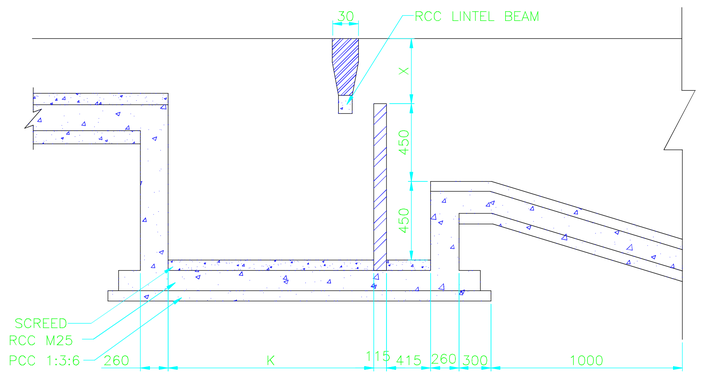

DETAIL – Ⓕ

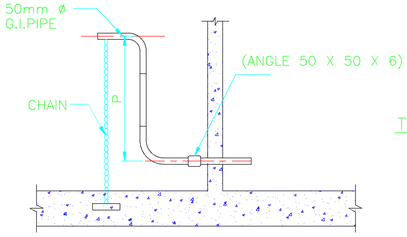

DETAIL – Ⓑ

ADJUSTABLE OIL SKINNING ARRANGEMENT

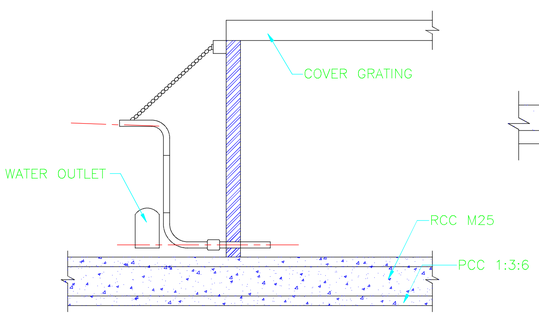

DETAIL – Ⓖ

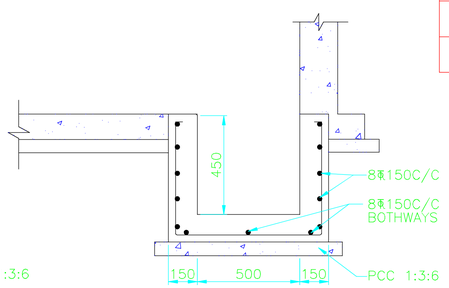

DETAIL – Ⓗ

WATER FLOW RATE		b1	b2	b3	L	W	D	K	P	t1	t2	t3
CUM/HR	LPM	mm	mm	mm	mm	mm	mm	mm	mm	mm	mm	mm
50	830	500	250	920	6000	1500	1000	1000	900	460	345	345
300	5000	1000	750	1200	14000	3500	1400	1200	1400	690	460	345
500	8330	1000	1000	1200	14000	6000	1400	1900	1400	690	460	345

REINFORCEMENT DETAILS FOR OWS WITH 50 CUM/HR FLOW (6.0m X 1.5m)

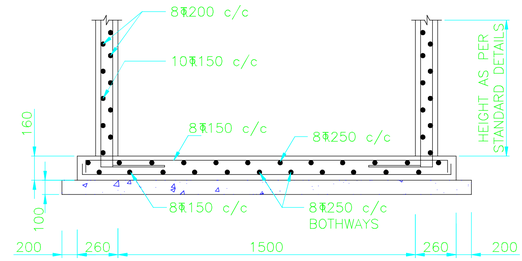

REINFORCEMENT DETAILS OF SEPARATOR AT SECTION – DD

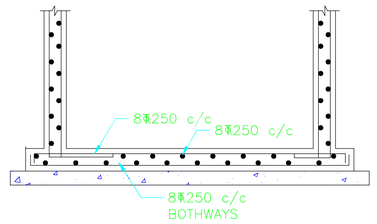

TYPICAL DETAILS FOR ALL 3 TYPES OF OWS REINFORCEMENT DETAILS OF GRIT CHAMBER AT SECTION – EE

REINFORCEMENT DETAILS FOR OWS WITH 300 CUM/HR FLOW (14.0m X 3.5m)

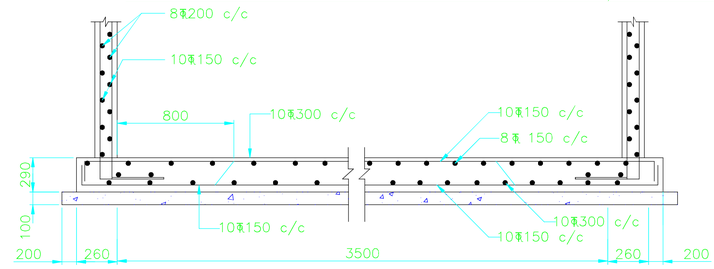

REINFORCEMENT DETAILS OF A SEPERATOR AT SECTION – DD

REINFORCEMENT DETAILS FOR OWS WITH 500 CUM/HR FLOW (14.0m X 3.5m)

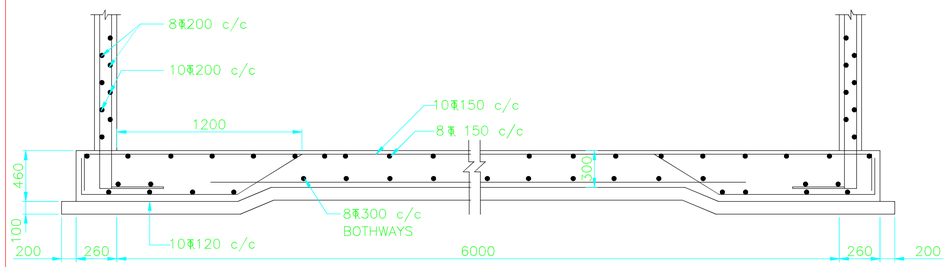

REINFORCEMENT DETAILS OF A SEPERATOR AT SECTION – DD

NOTE:

1. THE FLUME CAN JOIN THE SEPERATOR AT 90 OR 160 OR ANY ANGLE IN BETWEEN TO SUIT AT SITE CONDITIONS
2. TEASG TRACK CONSIST OF SUITABLE & TO 10mm ø M.S BAR SPACED C/C 60mm APPROX.
3. DESIGN OF FLUME MAY BE ALTERED TO SUIT SPACE & TOPOGRAPHY.
4. ALL DIMENSIONS ARE IN mm.
5. GRADE OF CONCRETE IS M 25.
6. REINFORCEMENT SHALL BE F 415 GRADE.
7. CLEAR COVER OF CONCRETE
   a) BASE SLAB = 50mm
   b) WALLS = 50mm
8. PLASTERING SHALL BE 20mm THK. IN C.M 1:3 WITH WATER PROFFING COMPOUND AS PER MANUFACTURE SPECIFICATION.

REVISION DRG. NO	DATE	ZONE OR PART	BRIEF RECORD	INITIALS

REVISIONS

BHARAT PETROLEUM CORPN. LTD.

SUBJECT :

STANDARD

OIL WATER SEPARATOR

SCALE : AS SHOWN | DRAWN : | FILE NO : B301-7-171 | CHECKED :

DATE : 10-10-2001 | C.E.

DATE | DRAWING NO.

NUMBERS CROSSED OUT ARE SUPERSEDED DRAWINGS

DRAWING NO.

D.2A,STD1.0